ORAC AXXENT®
COLLECTION

www.floorwood.cz
www.floorwood.sk
www.floorwood.hu

ORAC Belgium - tel: +32 (0)59-80 32 52 - fax: +32 (0)59-80 28 10
www.oracdecor.com

UM 800/03

INSTALLATION INSTRUCTIONS • INSTRUCTIONS DE POSE • PLAATSINGSINSTRUCTIES • GEBRAUCHSANLEITUNG • MANUAL DEL USARIO • GUIDA DELL' UTENTE • MANUAL DE UTILIZAÇÃO

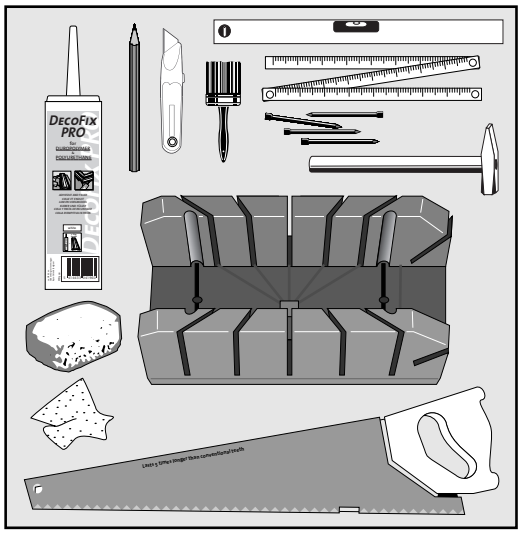

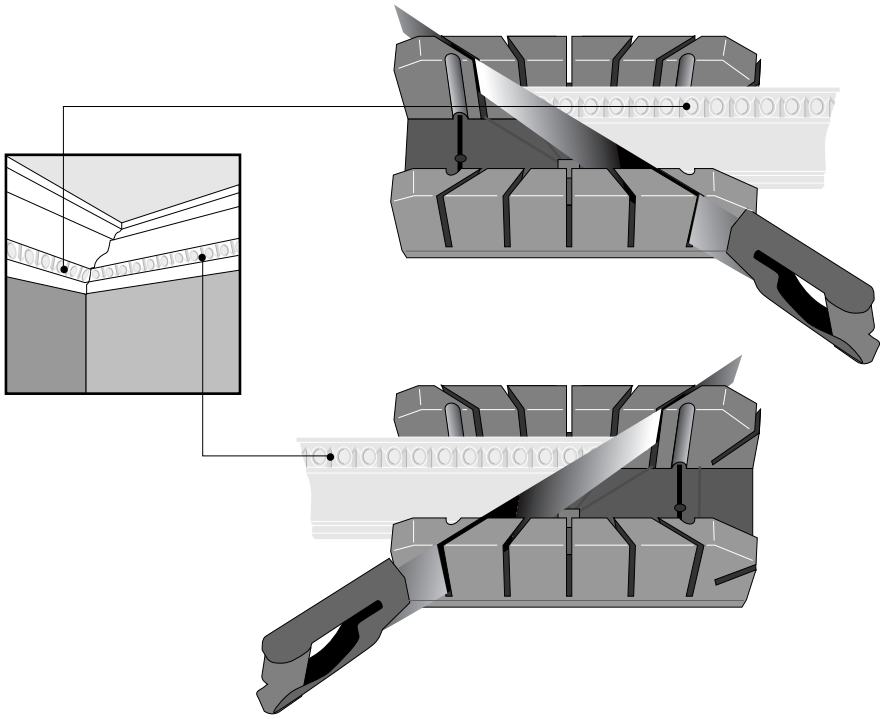

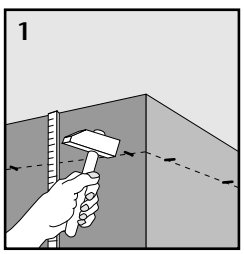

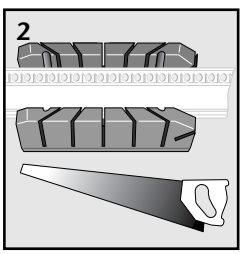

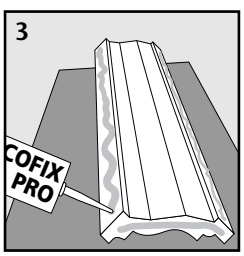

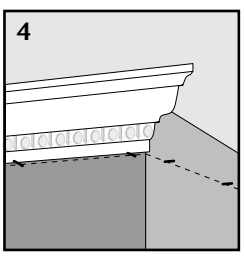

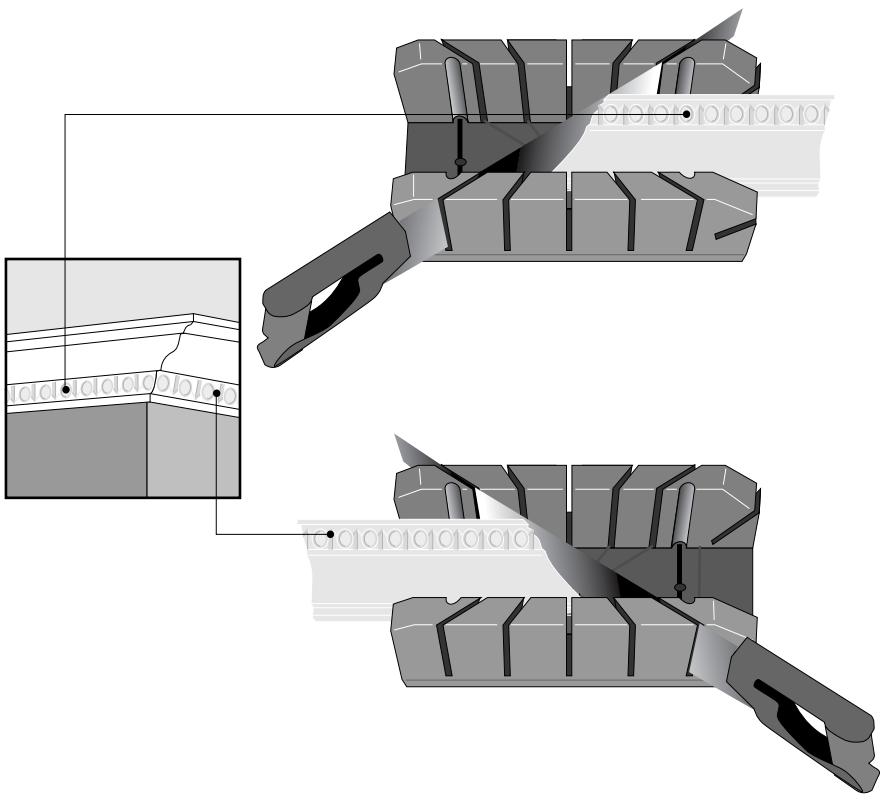

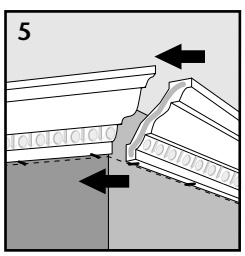

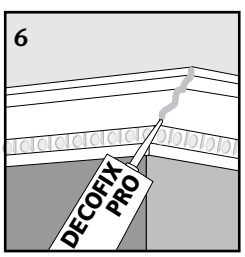

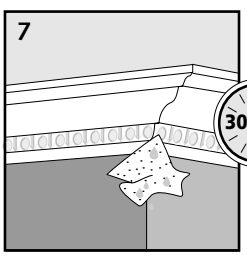

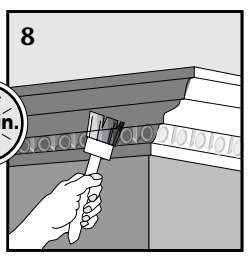

ORAC AXXENT®
COLLECTION

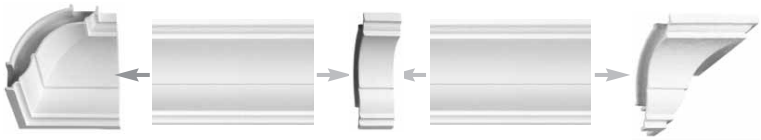

ORAC Belgium - tel: +32 (0)59-80 32 52 - fax: +32 (0)59-80 28 10
www.oracdecor.com

UM 810/03
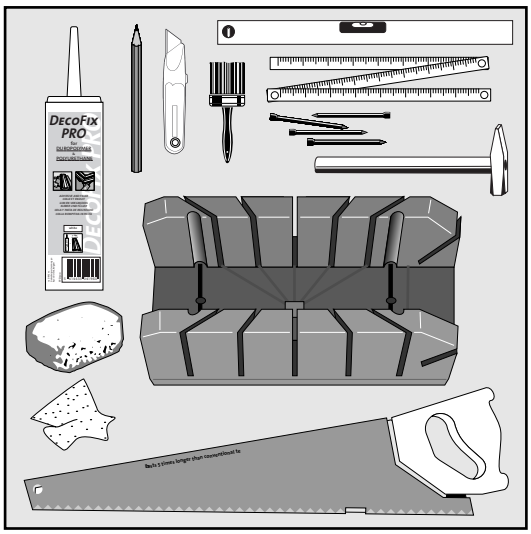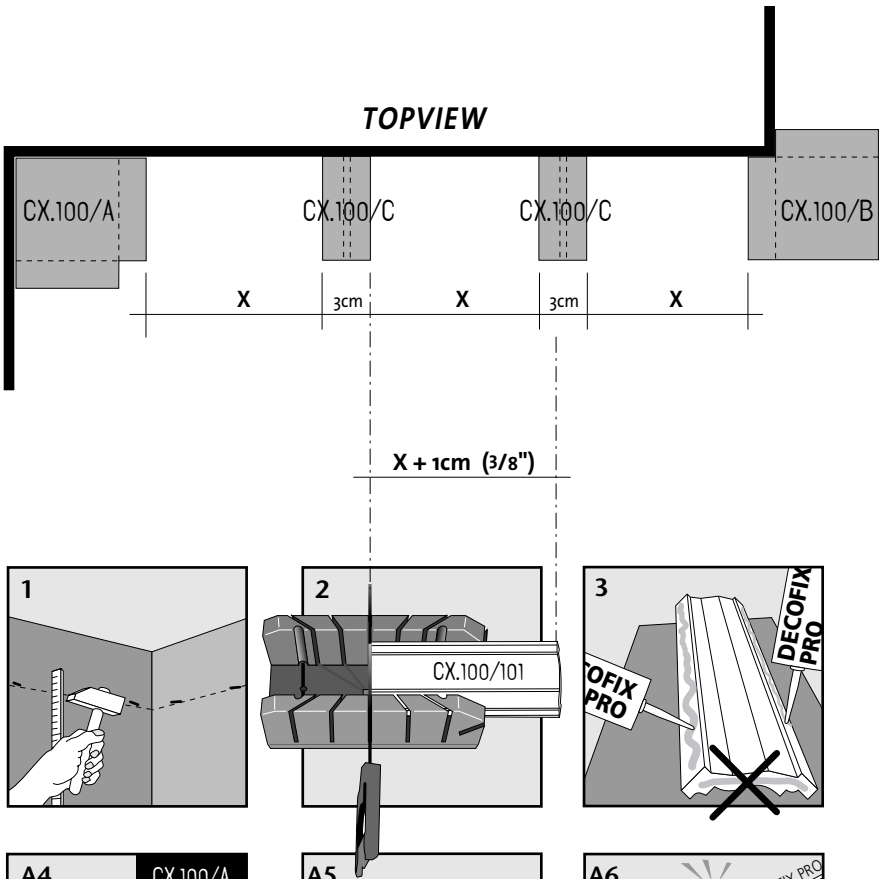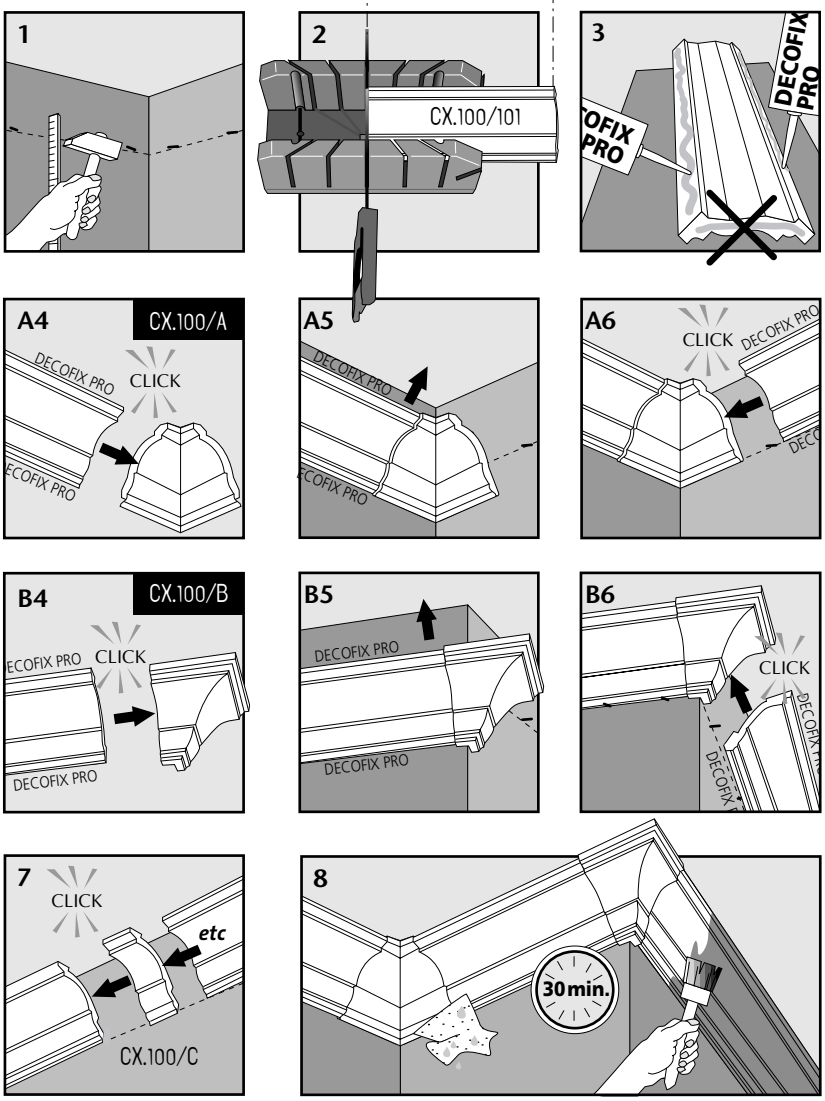
INSTALLATION INSTRUCTIONS • INSTRUCTIONS DE POSE • PLAATSINGSINSTRUCTIES • GEBRAUCHSANLEITUNG • MANUAL DEL USARIO • GUIDA DELL' UTENTE • MANUAL DE UTILIZAÇÃO